Macrolens model E: 52x73 mm.

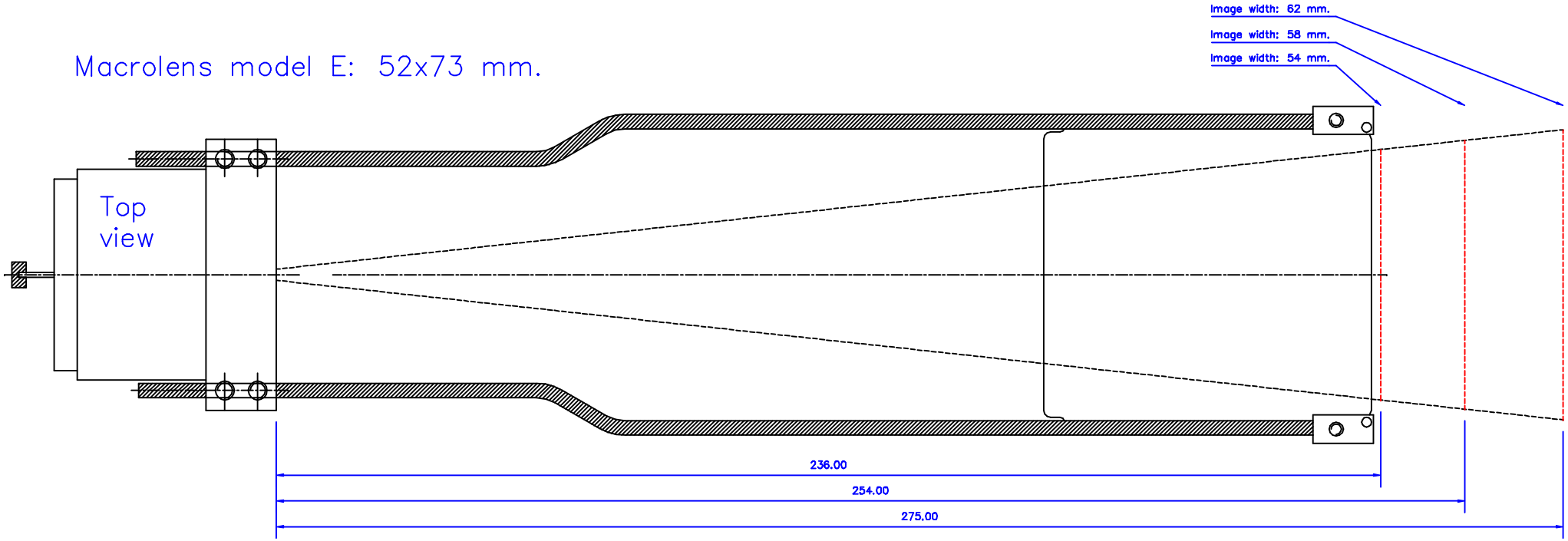

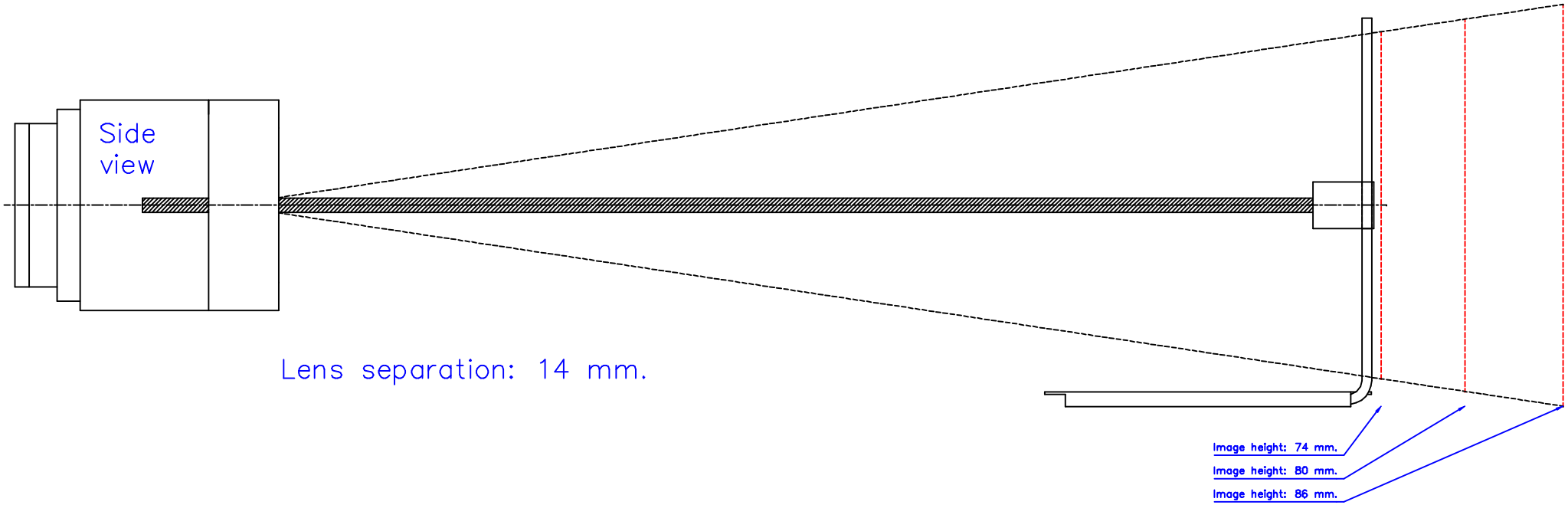

Lens separation: 14 mm.