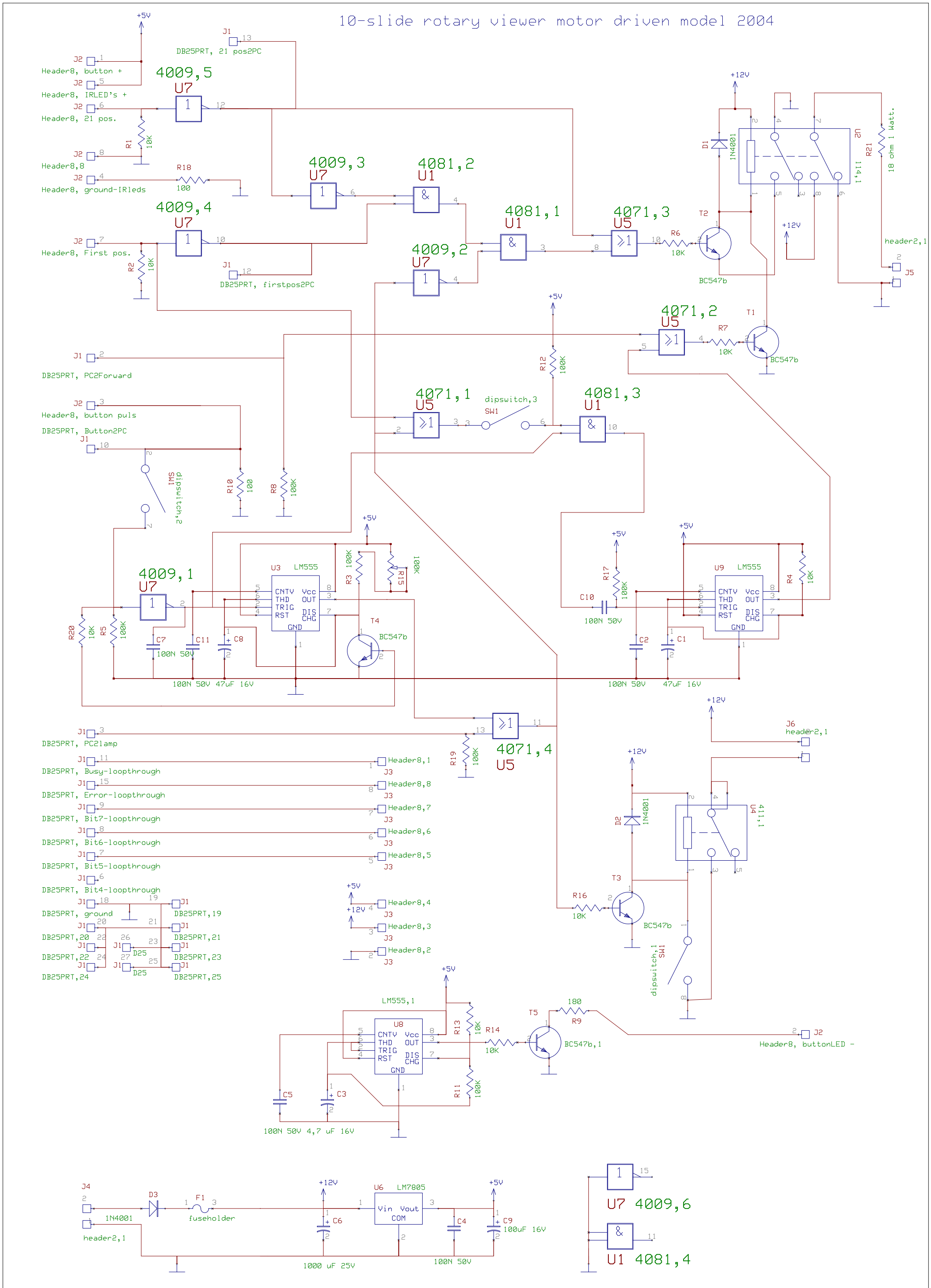10-slide rotary viewer motor driven model 2004