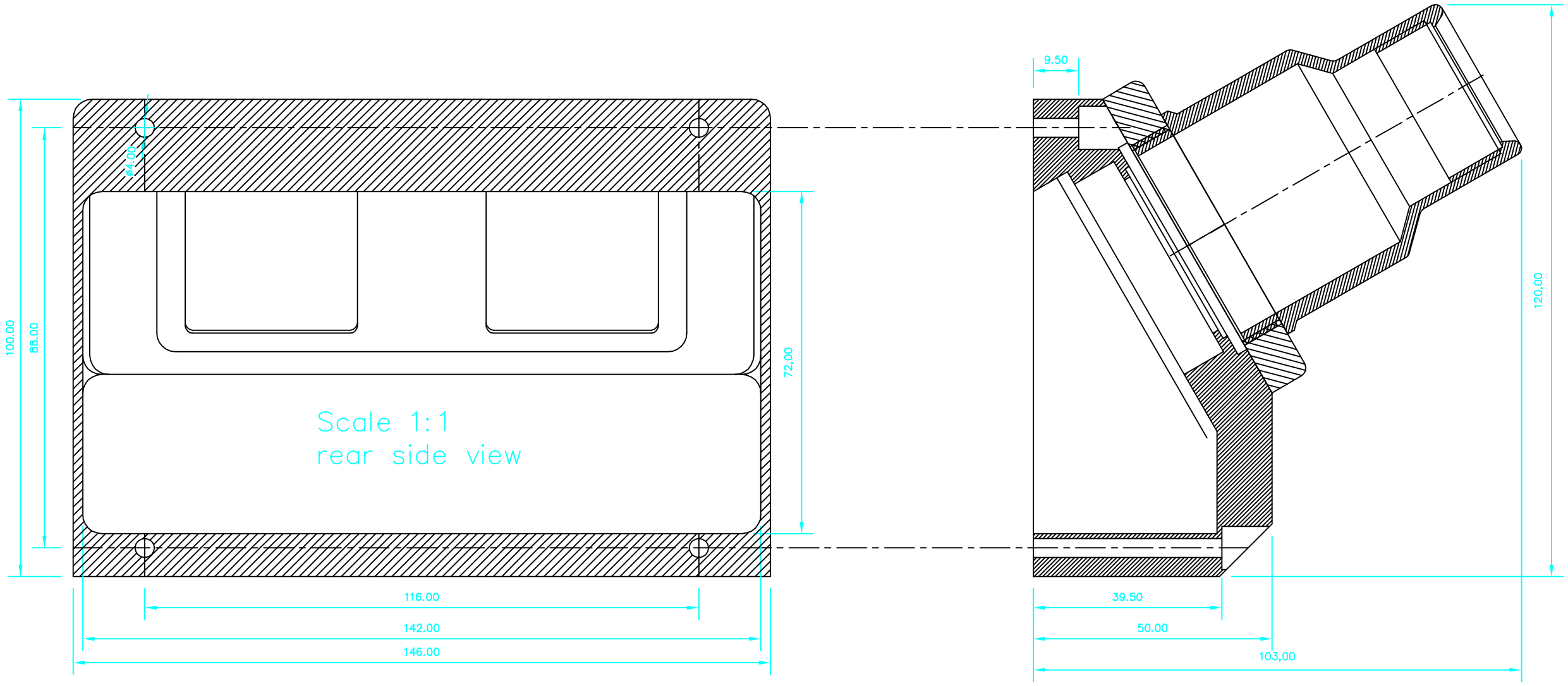
Scale 1:1
rear side view
Ø4.00
100.00
88.00
72.00
116.00
142.00
146.00
9.50
120,00
39.50
50.00
103,00